DTC	P0335	Crankshaft Position Sensor "A" Circuit

DTC	P0339	Crankshaft Position Sensor "A" Circuit Intermittent

DESCRIPTION

The Crankshaft Position (CKP) sensor system consists of a CKP sensor plate and a pickup coil. The sensor plate has 34 teeth and it is installed on the crankshaft. The pickup coil is made of an iron core and a magnet.

The sensor plate rotates and, as each tooth passes through the pickup coil, a pulse signal is created. The pickup coil generates 34 signals per engine revolution. Based on these signals, the ECM calculates the crankshaft position and engine RPM. Using these calculations, the fuel injection time and ignition timing are controlled.

DTC No.	DTC Detection Conditions	Trouble Areas
P0335	• No CKP sensor signal to ECM while cranking (2 trip detection logic) • No CKP sensor signal to ECM at engine speed of 600 rpm or more (2 trip detection logic)	• Open or short in CKP sensor circuit • CKP sensor • Sensor plate (CKP sensor plate) • ECM
P0339	Under conditions (a), (b) and (c), no CKP sensor signal to ECM for 0.05 seconds or more (1 trip detection logic): (a) Engine speed 1,000 rpm or more (b) Starter signal OFF (c) 3 seconds or more has lapsed since starter signal switched from ON to OFF	• Open or short in CKP sensor circuit • CKP sensor • Sensor plate (CKP sensor plate) • ECM

Reference: Inspection using an oscilloscope.

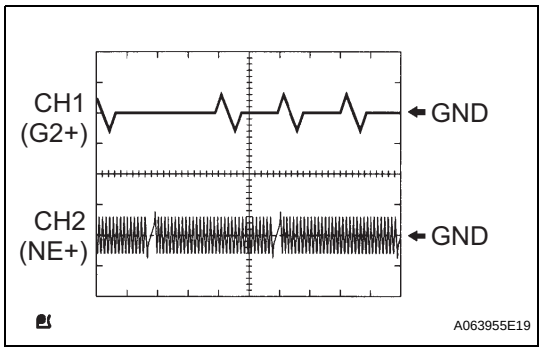

HINT:
- The correct waveform is shown on the left.
- G2+ stands for the Camshaft Position (CMP) sensor signal, and NE+ stands for the CKP sensor signal.

Items	Contents
Terminals	CH1: G2+ - NE- CH2: NE+ - NE-
Equipment Settings	5V/Division, 20ms/Division
Conditions	Cranking or idling

MONITOR DESCRIPTION

If there is no signal from the CKP sensor despite the engine revolving, the ECM interprets this as a malfunction of the sensor.

If the malfunction is not repaired successfully, a DTC is set 10 seconds after the engine is next started.

MONITOR STRATEGY

Related DTCs	P0335: Crankshaft position sensor range check during cranking P0335: Crankshaft position sensor range check during engine running
Required Sensors/Components (Main)	Crankshaft Position (CKP) sensor
Required Sensors/Components (Related)	-
Frequency of Operation	Continuous
Duration	4.7 seconds: CKP sensor range check during cranking 0.016 seconds: CKP sensor range check during engine running
MIL Operation	2 driving cycles
Sequence of Operation	None

TYPICAL ENABLING CONDITIONS

The monitor will run whenever the following DTCs are not present	None

Crankshaft Position Sensor Range Check during Cranking P0335:

Starter	ON
Minimum battery voltage while starter ON	Less than 11 V

Crankshaft Position Sensor Range Check during Engine Running P0335:

Engine speed	600 rpm or more
Starter	OFF
Time after starter from ON to OFF	3 seconds or more

TYPICAL MALFUNCTION THRESHOLDS

Crankshaft Position Sensor Range Check during Cranking P0335:

CKP sensor signal	No signal for 4.7 seconds

Crankshaft Position Sensor Range Check during Engine Running P0335:

CKP sensor signal	No signal for 0.016 seconds

COMPONENT OPERATING RANGE

CKP sensor	• CKP sensor output voltage fluctuates while crankshaft revolving • 34 CKP sensor signals per crankshaft revolution

WIRING DIAGRAM

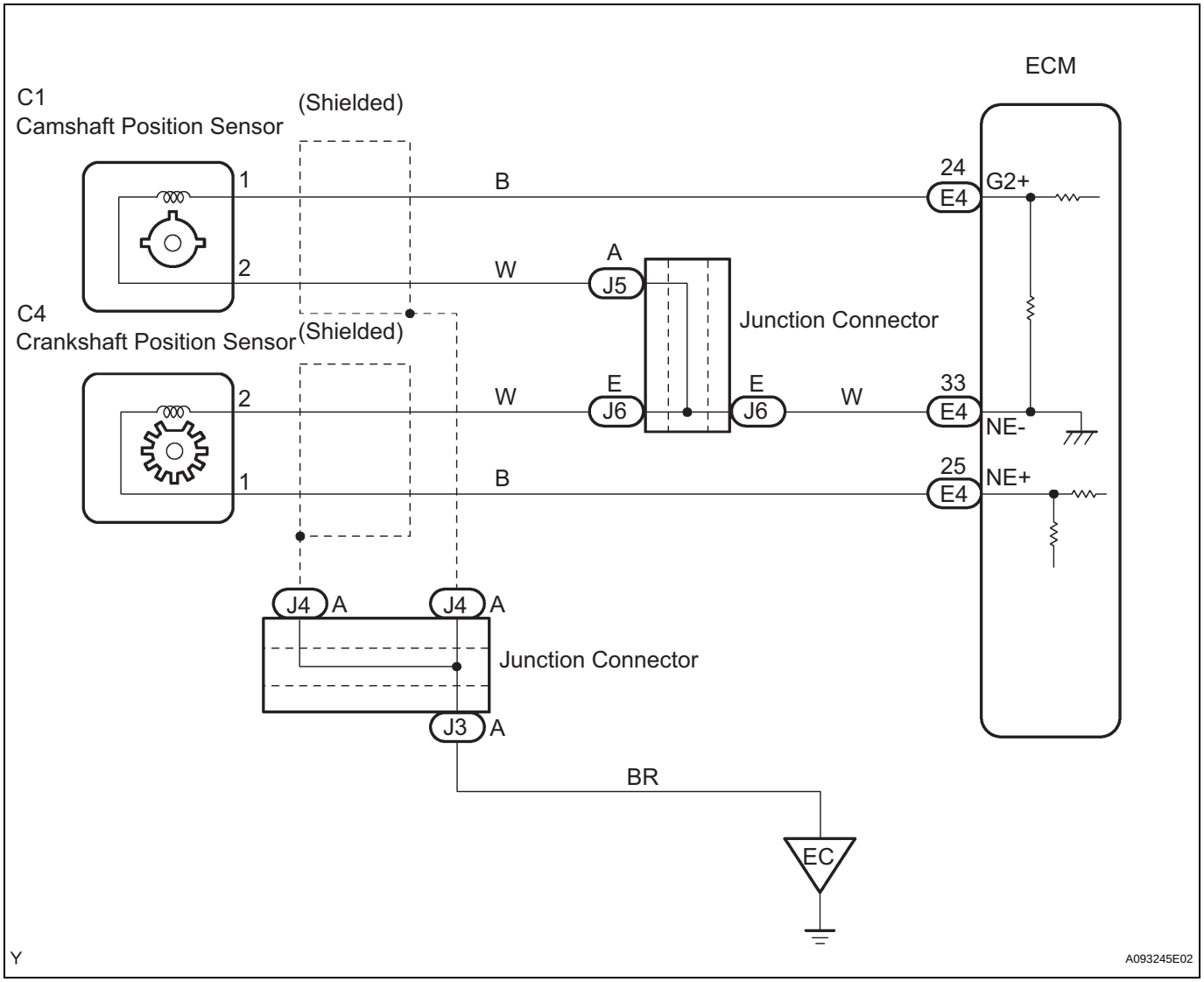

INSPECTION PROCEDURE

HINT:

- If no problem is found by this diagnostic troubleshooting procedure, troubleshoot the engine mechanical systems.
- Check the engine speed. The engine speed can be checked by using an intelligent tester or OBD II scan tool. To check, follow operation below:
  (a) Connect an intelligent tester or OBD II scan tool to the DLC3.
  (b) Start the engine.
  (c) Turn the tester or scan tool ON.
  (d) If using an intelligent tester, select the following menu items: DIAGNOSIS / ENHANCED OBD II / DATA LIST / ALL / ENGINE SPD.
  (e) If using an OBD II scan tool, refer to the instruction manual.
  The engine speed may be indicated as zero despite the engine revolving normally. This is caused by a lack of NE signals from the Crankshaft Position (CKP) sensor. Alternatively, the engine speed may be indicated as lower than the actual engine speed, if the CKP sensor voltage output is insufficient.

ES

- Read freeze frame data using an intelligent tester or OBD II scan tool. The ECM records vehicle and driving condition information as freeze frame data the moment a DTC is stored. When troubleshooting, freeze frame data can be helpful in determining whether the vehicle was running or stopped, whether the engine was warmed up or not, whether the air/fuel ratio was lean or rich, as well as other data recorded at the time of a malfunction.

1 INSPECT CRANKSHAFT POSITION SENSOR (RESISTANCE)

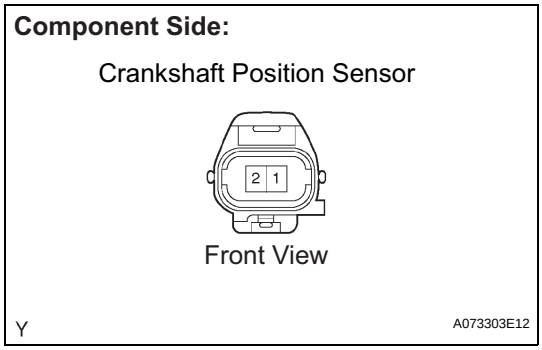

(a) Disconnect the C4 Crankshaft Position (CKP) sensor connector.
(b) Measure the resistance between terminals 1 and 2.
Standard resistance

Tester Connections	Specified Conditions
1 - 2	Between 1,630 Ω and 2,740 Ω at cold
1 - 2	Between 2,065 Ω and 3,225 Ω at hot

NOTICE:
Terms cold and hot refer to the temperature of the coils. Cold means approximately -10° to 50°C (14° to 122°F). Hot means approximately 50° to 100°C (122° to 212°F).

(c) Reconnect the CKP sensor connector.

NG → **REPLACE CRANKSHAFT POSITION SENSOR**

OK

2 CHECK HARNESS AND CONNECTOR (CRANKSHAFT POSITION SENSOR - ECM)

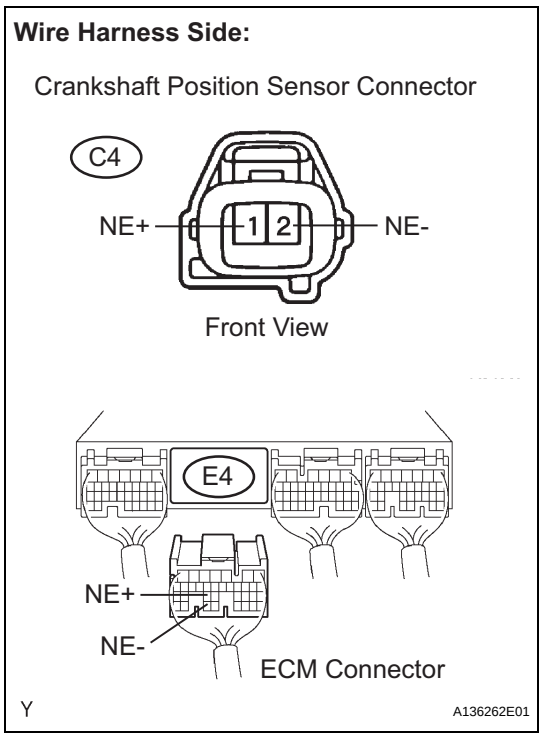

(a) Disconnect the C4 CKP sensor connector.
(b) Disconnect the E3 ECM connector.
(c) Check the resistance.
Standard resistance (Check for open)

Tester Connections	Specified Conditions
NE+ (C4-1) - NE+ (E4-25)	Below 1 Ω
NE- (C4-2) - NE- (E4-33)	Below 1 Ω

Standard resistance (Check for short)

Tester Connections	Specified Conditions
NE+ (C4-1) or NE+ (E4-25) - Body ground	10 kΩ or higher
NE- (C4-2) or NE- (E4-33) - Body ground	10 kΩ or higher

(d) Reconnect the ECM connector.
(e) Reconnect the CKP sensor connector.

NG → **REPAIR OR REPLACE HARNESS OR CONNECTOR**

OK

3	CHECK CRANKSHAFT POSITION SENSOR (SENSOR INSTALLATION)

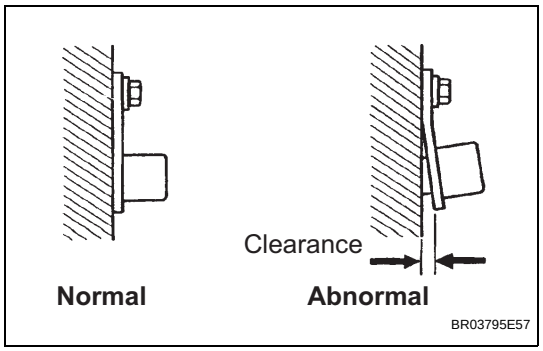

(a) Check the CKP sensor installation.
OK:
Sensor is installed correctly.

NG → **REPAIR OR REPLACE CRANKSHAFT POSITION SENSOR**

ES

OK

4	CHECK CRANKSHAFT POSITION SENSOR PLATE (TEETH OF SENSOR PLATE)

(a) Check the teeth of the sensor plate.
OK:
Sensor plate does not have any cracks or deformation.

NG → **REPLACE CRANKSHAFT POSITION SENSOR PLATE**

OK

REPLACE ECM